1. PERFORMANCE CHARACTERISTICS
- UNION BATTERY –

1-1 ELECTROCHEMICAL PROCESS

THE CHEMICAL REACTION TAKING PLACE IN LEAD ACID BATTERY IS AS SHOWN IN THE FOLLOWING FORMULA.

$$Pb0_2 + 2H_2SO_4 + Pb \underset{\text{(CHARGE)}}{\overset{\text{(DISCHARGE)}}{\rightleftharpoons}} PbSO_4 + 2H_2O + PbSO_4$$

| POS. | ELECTROLYTE | NEG. | POS. | ELECTROLYTE | NEG. |

AT DISTANCE, LEAD OXIDE IN POSITIVE PLATES AND SPONGY LEAD IN NEGATIVE PLATES REACT WITH SULFURIC ACID IN THE ELECTROLYTE AND GRADUALLY TRANSFORM INTO LEAD SULPHATE, DURING WHICH THE SULFURIC ACID CONCENTRATION DECREASES.
CONVERSELY, WHEN THE BATTERY IS CHARGED, THE POSITIVE AND SULPHATE GRADUALLY REVERT TO LEAD DIOXIDE AND SPONGY LEAD RESPECTIVELY. RELEASING THE SULPHURIC ACID ABSORBED IN THE ACTIVE MATERIAL. DURING WHICH THE SULPHURIC ACID CONCENTRATION INCREASES, AS SHOWN IN FIGURE 1.

WHEN BATTERY CHARGING APPROACHES ITS FINAL STAGE. THE CHARGING CURRENT IS CONSUMED SOLELY FOR ELECTROLYTE DECOMPOSITION OF WATER IN THE ELECTROLYTE, RESULTING IN GENERATION OF OXYGEN GAS FROM POSITIVE PLATES AND HYDROGEN GAS FROM NEGATIVE PLATES. THE GENERATED GAS WILL ESCAPE FROM THE BATTERY CAUSING A DECREASE OF THE ELECTROLYTE, THEREBY REQUIRING OCCASIONAL WATER REPLENISHMENT.

HOWEVER, OUR BATTERIES UTILIZE THE CHARACTERISTICS OF SPONGY LEAD, OR NEGATIVE ACTIVE MATERIAL, WHICH IS VERY ACTIVE IN MOIST CONDITIONS AND REACTS VERY QUICKLY WITH OXYGEN. THEREBY SUPPRESSING THE DECREASE OF WATER ELIMINATING THE NEED OF WATER REPLENISHMENT.

THE PROCESS OF CHARGING FROM ITS BEGINNING TO THE FINAL STAGE IS IDENTICAL WITH THAT OF CONVENTIONAL BATTERIES AS SHOWN IN FIGURE 1.

ON THE OTHER HAND, AFTER THE STAGE OF CHARGING OR UNDER OVERCHARGE CONDITION, THE CHARGING ENERGY IS CONSUMED FOR ELECTROLYTIC DECOMPOSITION OF WATER, AND THE POSITIVE PLATES GENERATE OXYGEN GAS WHICH REACTS WITH THE SPONGY LEAD IN NEGATIVE PLATES AND THE SULFURIC ACID IN ELECTROLYTE, TURNING A PART OF NEGATIVE PLATES INTO A DISCHARGED CONDITION. THUS SUPPRESSING THE HYDROGEN GAS GENERATION FROM NEGATIVE PLATES.

THE PART OF NEGATIVE PLATES, WHICH HAD TURNED TO DISCHARGED CONDITION THROUGH REACTION WITH OXYGEN GAS, IS THEN REVERTED TO ORIGINAL SPONGY LEAD BY SUBSEQUENT CHARGING. THUS, A NEGATIVE PLATE KEEP EQUILIBRIUM BETWEEN THE AMOUNT WHICH TURNS INTO SPONGY LEAD BY CHARGING AND THE AMOUNT OF SPONGY LEAD WHICH TURNS INTO LEAD SULPHATE THROUGH ABSORBING THE GAS GENERATED FROM POSITIVE PLATES, WHICH MAKES IT POSSIBLE FOR THE BATTERY TO BE OF A SEALED TYPE.

THE CHEMICAL REACTION, WHICH TAKES PLACE AFTER THE FINAL STAGE, OF CHARGING OR UNDER OVERCHARGE CONDITION IS AS SHOWN IN FIGURE 2.

REACTION FROM BEGINNING OF CHARGE TO BEFORE THE FINAL STAGE.

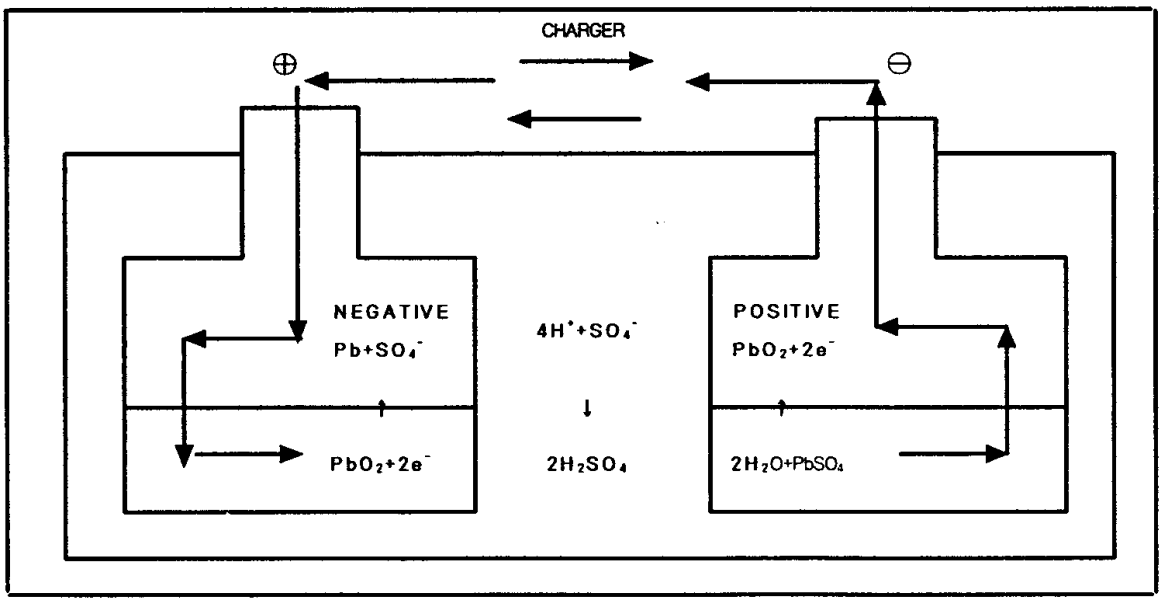

(FIGURE 1)

(1) REACTION AT POSITIVE PLATE (OXYGEN GENERATION)

a) $2H_2O$ ---- $O_2 + 4h^+ + 4e^-$

└ MIGRATES TO NEGATIVE PLATE SURFACE

(2) REACTION AT NEGATIVE PLATE

b) CHEMICAL REACTION OF SPONGY LEAD WITH OXYGEN

$2Pb + O_2$ ---- $2PbO$

c) CHEMICAL RFEACTION OF PbO WITH ELECTROLYTE

$2PbO + 2H_2SO_4$ ----$2PbSO_4 + 2H_2O$

└ TO REACTION (a)

d) REACTION OF $PbSO_4$

TO REACTION (b)

$2PbSO_4 + 4H^+ + 4e^-$ ---- $2Pb + 2H_2SO_4$

TO REACTION (a)

TOTAL REACTION AT NEGATIVE PLATE

$O2 + 4H^+ + 4e^-$ ---- $2H_2O$

REACTION AFTER FINAL STAGE OF CHARGE

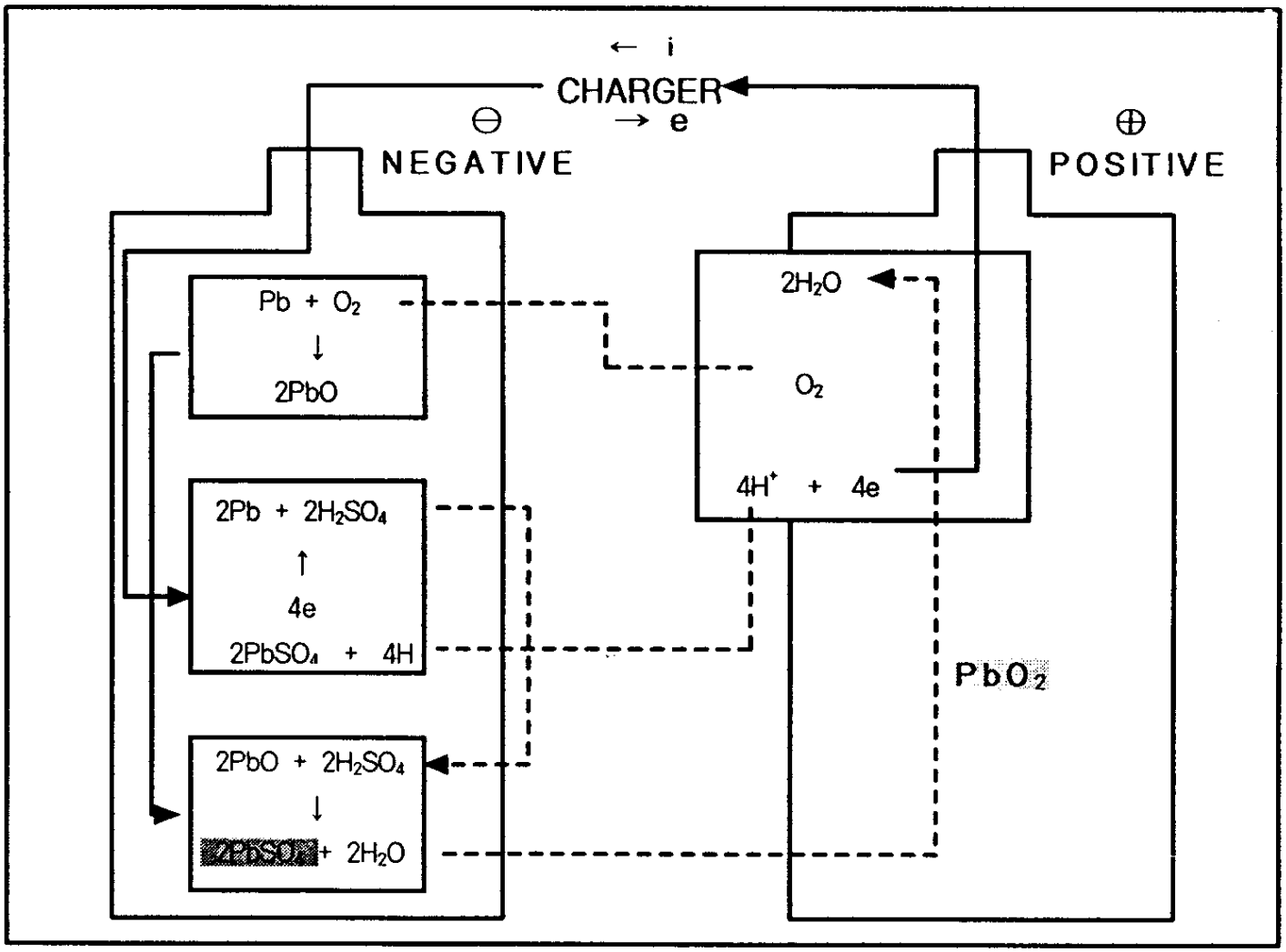

(FIGURE 2)

AS DESCRIBED ABOVE, THE OXYGEN GAS GENERATED FROM THE POSITIVE PLATES REACTS QUICKLY WITH THE ACTIVE MATERIAL IN CHARGED CONDITION IN THE NEGATIVE PLATES AND RETURNS TO WATER CAUSING VERY LITTLE LOSS THEREOF. THUS MAKING IT POSSIBLE TO BUILD THE BATTERY IN A SEALED CONSTRUCTION.